This drawing is the property of VAT.

Revision

Customer number

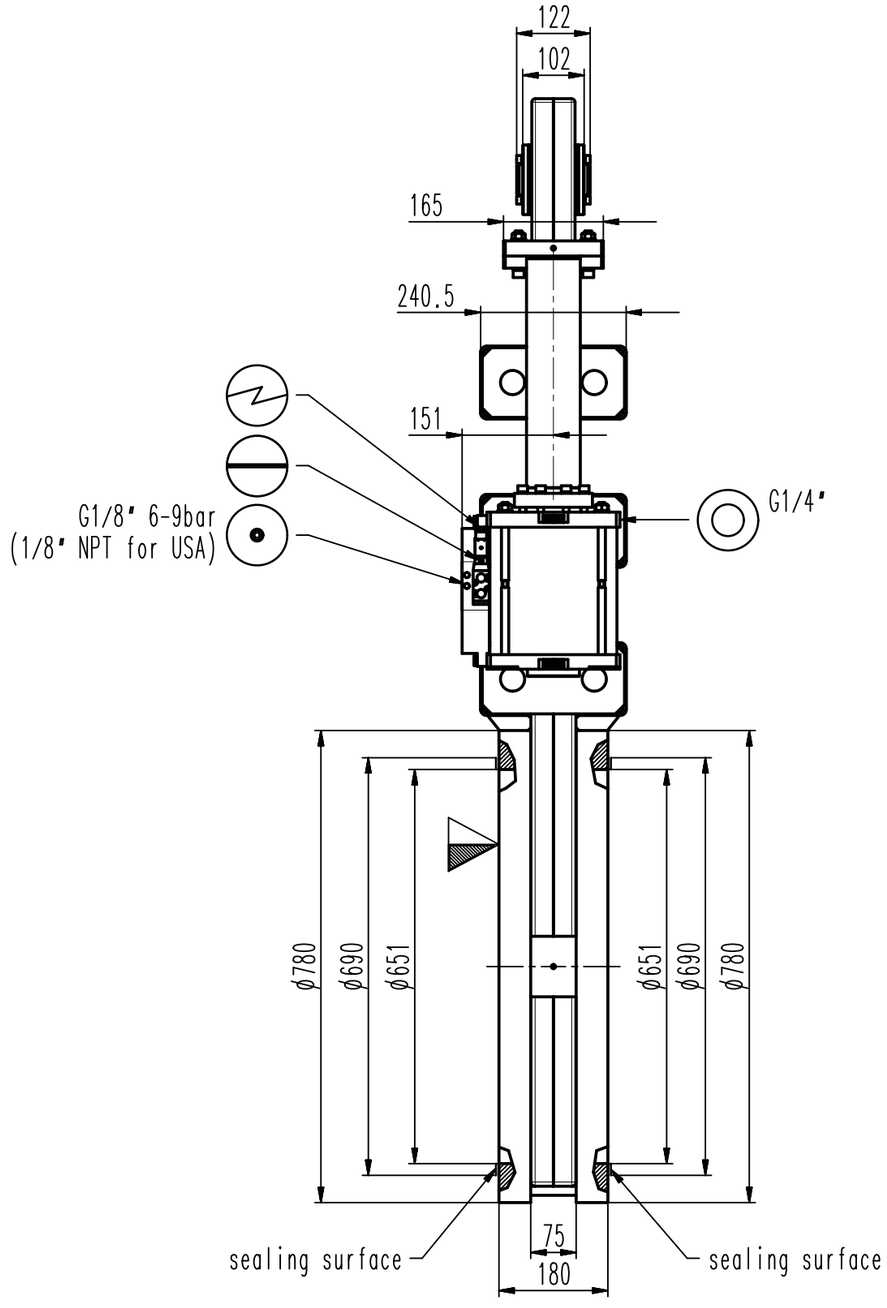

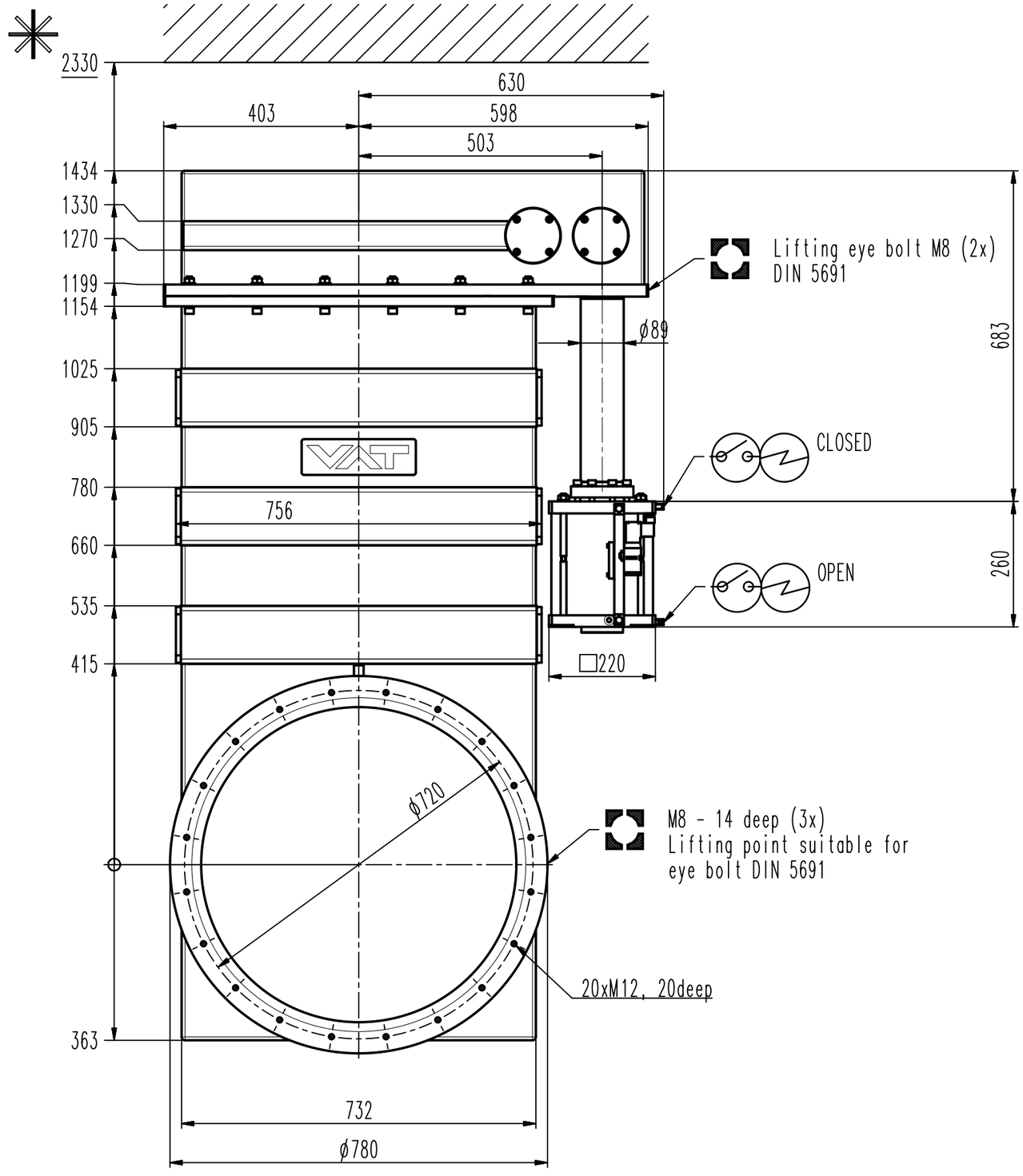

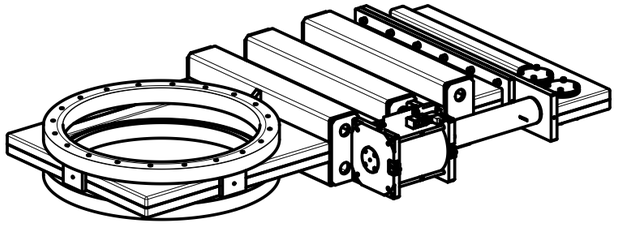

- Seat side
- Comp. air connection
- Electrical connection
- Leak detection port
- Mech. pos. indication
- Position indicator
- Required for dismantling
- Emergency actuation
- For attachment
- Bake-out area
- Differential pumping port

Large HV gate valves

Series	191
Ordering No.	19156-PE44-0001
Projection E	
DN	630
Flange	ISO-F
Dimensional Drawing	
	498547
Rev.	B

VAT Vakuumventile AG
CH-9469 Haag , Switzerland
Tel ++41 81 7716161 Fax ++41 81 7714830

Rev.-Date: 08.09.15
Visa: WAG